RevNo	Revision note	Date	Signature	Checked

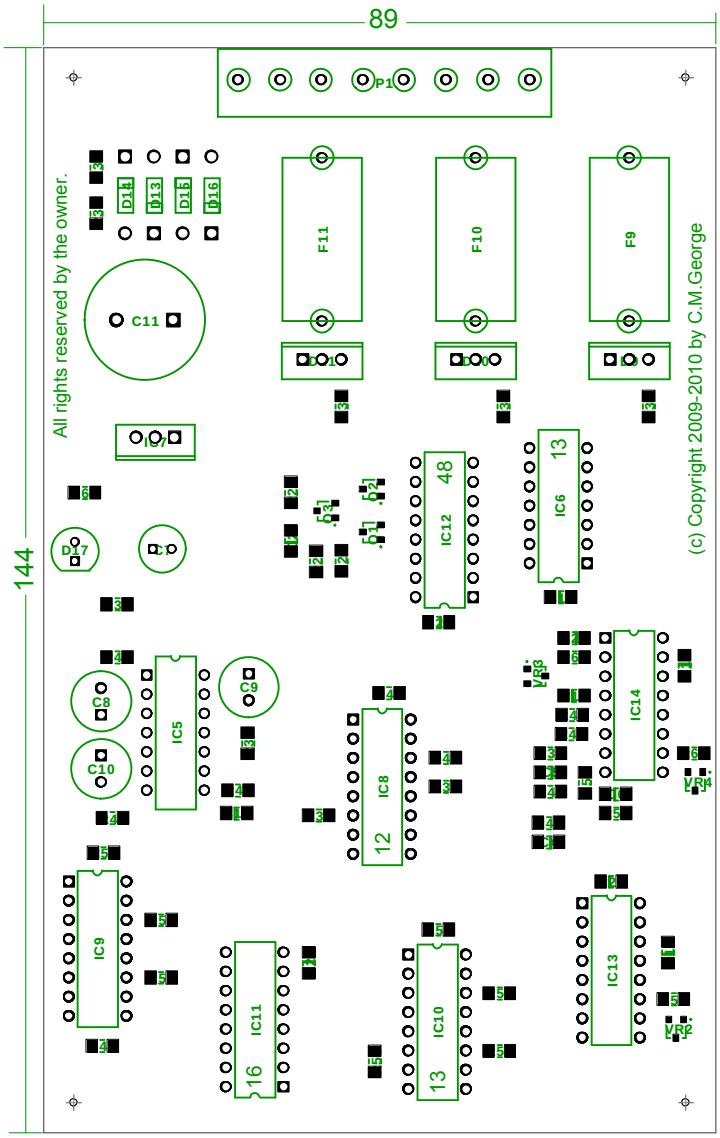

Itemref	Quantity	Title/Name, designation, material, dimension etc		Article No./Reference	
Designed by C.M. George		Checked by C.M. George	Approved by - date 29/07/2008	File name	Date 29/07/2008	Scale 1:1
electronica-project.net					Edition 0	Sheet 1/1